Horizontal Continuous Band Sealer with Nozzle Type Vacuum Device

PP-20TAZ

The Preferred Pack® Model PP-20TAZ is a high quality Horizontal Continuous Band Sealer with nozzle type vacuum device designed to remove 70-90% of excess air from the bag. Suitable for sealing all types of materials and bags. Can be used for food, medical or cosmetic industries to name a few.

Uses PE, PP, aluminum foil bags or any heat sealable material.

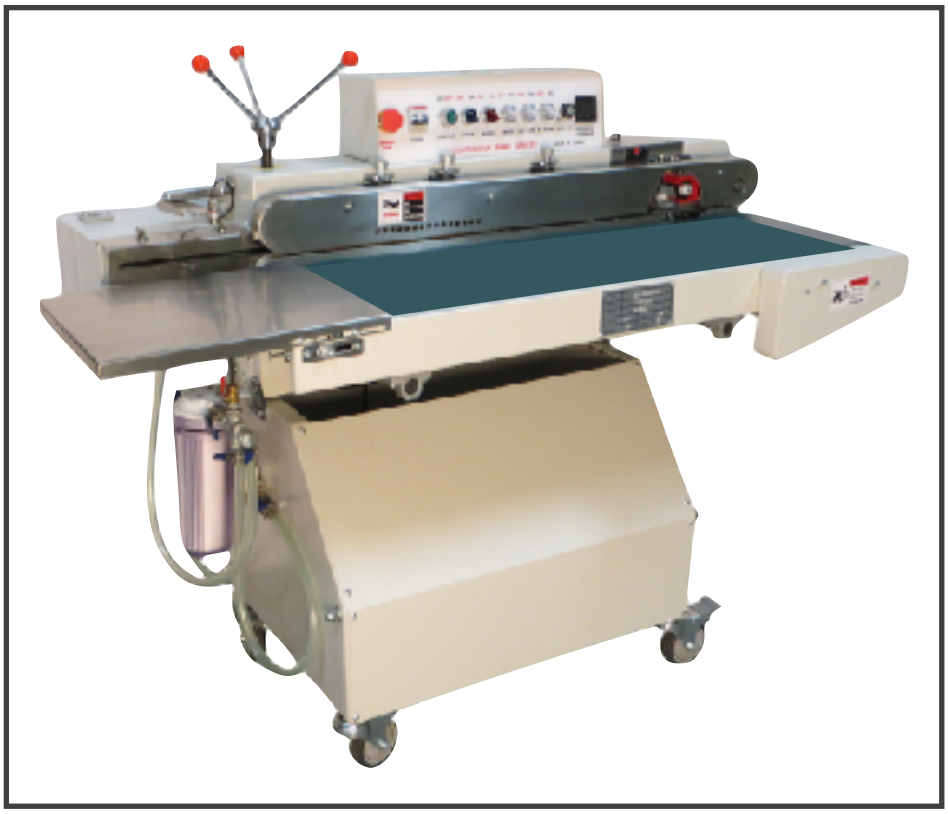

Standard Features

- Nozzle type air sucking device to remove 70-95% of excess air from bag
- Variable sealing speed up to 460”/minute
- Left to right feed direction
- Wide seal width 10MM (.394”)
- Seals bags up to 7 mil thick
- Max bag weight 22 lb.
- 7.9” wide conveyor belt
- Adjustable conveyor height
- Powder coated frame
- Locking casters
- 1 year warranty

EXCEL PACKAGING

11799 Jersey Boulevard
Rancho Cucamonga, CA 91730

P. 909-476-1100
F. 909-923-1313

Website: www.excelpackagingequipment.com
Email: info@excelpackagingequipment.com

PP-20TAZ

Horizontal Continuous Band Sealer with Nozzle Type Vacuum Device

Optional Gas Flush Device

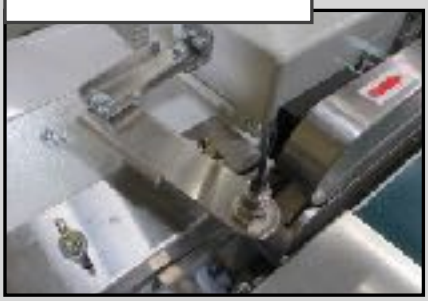

Optional Hot Ink Roller Date Coder

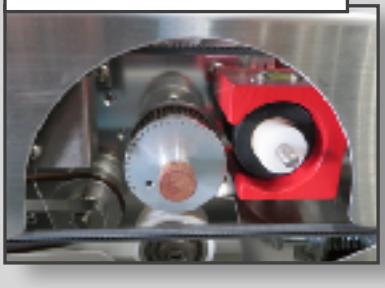

Optional Hot Stamp Printer Ribbon Date Coder

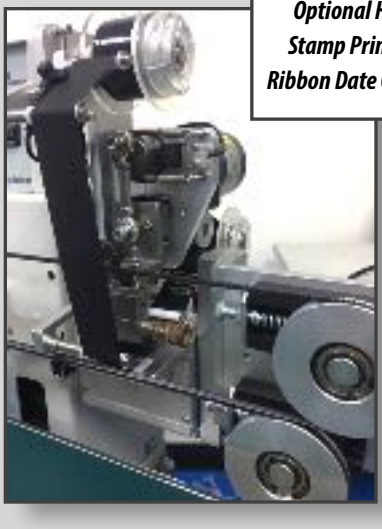

Specifications

Sealing Speed	Variable up to 460″/minute
Electrical	110 Volt Power
Air	None Required
Weight	240 lb. Net / 320 lb. Shipping
Conveyor Length	1100mm (43 inches)
Conveyor Belt Width	7.9″ wide
Options	220 Volt Power Wider Conveyor Widths, 11.8″ or 15.75″ 4 Digit Counter Bag Top Trimmer (not available with date coders) All Stainless Steel Construction Seal Throat Depth of 3.5″ or 5.4″ Gas Flush Device to Extend Shelf Life Filter
Date Coder Options	Hot Ink Roller Coder Hot Stamp Ribbon Printer

Technical Drawings

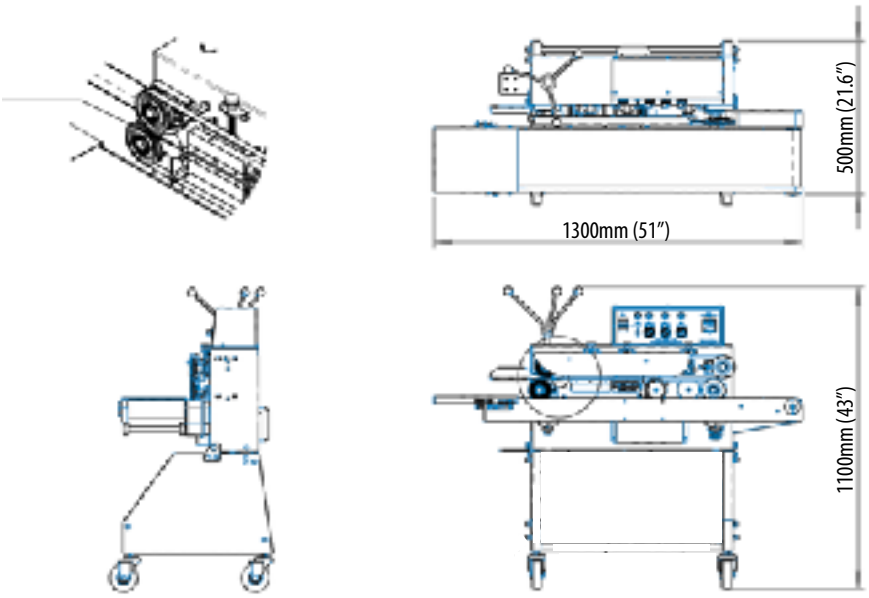

EXCEL PACKAGING

11799 Jersey Boulevard
Rancho Cucamonga, CA 91730

P. 909-476-1100
F. 909-923-1313

Website: *www.excelpackagingequipment.com*
Email: *info@excelpackagingequipment.com*